DATA SHEET

Varidee
Profiltechnik GmbH



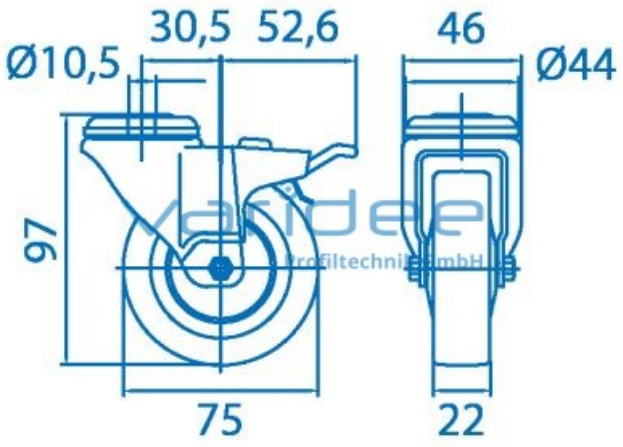

Castor D75 swivel, double-brake, black

Reference: LR-D75-DFS

Tires TPE, 90 Sh A, anthracite
Load capacity: 60 kg/castor
Material: Steel sheet housing
Surface: powder coated
Color: jet black RAL 9005
m = 333.0 g

Swivel castors are suitable for use on frames, tables and transport trolleys. They are characterized by good unwinding behavior and a high load-bearing capacity. The tread made of TPE is resistant to most environmental influences. For easier mounting, additional orderable foot plates in different sizes are offered.

Industriestraße 31
91171 Greding

www.varidee.de
info@varidee.de

Telefon: +49 84 63 603 63-0
Fax: +49 84 63 603 63-11

Varidee
Profiltechnik GmbH